BULGARIAN ACADEMY OF SCIENCES

CYBERNETICS AND INFORMATION TECHNOLOGIES • Volume **8**, No 1

Sofia • 2008

Position Control of Induction Motors by Exact Feedback Linearization*

Kostadin Kostov, Stanislav Enev[1], Farhat Fnaiech[2], Assen Todorov[1]

[1]*Technical University - Sofia, 8 Kl. Ohridski Str., 1000 Sofia, Bulgaria,*
E-mail: sta_enev@yahoo.com
[2]*Université de Tunis, ESSTT, 5 Av. Taha Hussein, 1008 Tunis, Tunisia*

Abstract: *Input-output linearization approach to induction motor position control problem is investigated. Linearizing transformation and control law for the full sixth-order induction motor model are presented. The effects of variations in mechanical parameter values on the linearized system are derived and discussed. Simulation results with the discrete-time version of the obtained overall controller are presented.*

Keywords: *feedback linearization, induction motor, position control.*

1. Introduction

Motion control applications are mostly based on DC and PM motors. Induction motors, on the other hand, are known with their ruggedness and reliability, due to their simple construction, much lower cost, lack of commutating elements, better power to mass ratio compared to the DC motors, which make them an attractive alternative in these applications. However, the advantages above mentioned come with the very complicated, strongly coupled nonlinear dynamics, which requires putting in place sophisticated control algorithms in order to obtain good performance. A good overview of the state of the art in electric servo drives can be found in [15].

Different approaches to induction motors position control are available in the scientific literature, mostly based on passivity theory and sliding-mode designs for the current-command mode with different adaptive features in the control scheme

* This work is supported by the R&D Sector at the Technical University – Sofia, PhD Research Project, contract No ПД – 1015.

[10, 12, 13, 14] in order to compensate for mechanical parameter variations. In [12] a feedback linearization-like technique is used to decouple rotor position and flux. An adaptive position tracking control algorithm is presented in [9].

The application of input-output feedback linearizing techniques to induction motor control design [2, 6, 7, 8, 16], enables the exact linearization of rotor speed/position and flux dynamics. Unlike the case of field-oriented control, where only asymptotic decoupling is achieved i.e. when the flux is constant, here this restriction is eliminated and both system outputs are completely decoupled. This feature enables the optimization of a motor torque [2], without degrading mechanical output regulation, which makes feedback linearization an attractive approach to induction motor position control. Papers [2, 6, 7] report experimental results of an induction motor position control system, based on input-output linearization of the current-fed field-oriented model, showing good position tracking and ability to independently control the flux magnitude.

In this paper input-output linearization approach to induction motor position control problem is investigated. Linearizing transformation and control law for the full sixth-order induction motor model are presented. The effects of variations in mechanical parameter values on the linearized system are derived and discussed. Outer-loop controllers are proposed and simulation results with the discrete-time version of the obtained overall controller are presented.

2. Dynamic modeling of the induction motor

The induction motor considered here is a three-phase stator, three-phase short circuited rotor machine. The following considerations are valid for the case of a squirrel-cage rotor, since it is equivalent to a three-phase short-circuited one through a simple transformation. The common assumptions are adopted for the modeling i.e. symmetrical construction, sinusoidal distribution of the field in the air-gap and linearity of magnetic circuits.

Remark: The rotor flux magnitude can be kept away from the saturation zone by an appropriate control action, thus forcing the assumption for linear magnetic circuits.

Writing the equations describing the motor dynamic behavior in the two-phase stator-fixed α–β frame and eliminating stator fluxes and rotor currents, the following equivalent two-phase model is obtained:

$$
\begin{aligned}
&\dot{\omega} = \mu(\psi_{R\alpha} i_{S\beta} - \psi_{R\beta} i_{S\alpha}) - cJ^{-1}\omega - J^{-1}\tau_L, \\
&\dot{\psi}_{R\alpha} = -\eta\psi_{R\alpha} - n_p\omega\psi_{R\beta} + \eta m i_{S\alpha}, \\
&\dot{\psi}_{R\beta} = -\eta\psi_{R\beta} + n_p\omega\psi_{R\alpha} + \eta m i_{S\beta}, \\
&\dot{i}_{S\alpha} = -\gamma i_{S\alpha} + \eta\zeta\psi_{R\alpha} + \zeta n_p\omega\psi_{R\beta} + (\sigma l_S)^{-1} u_{S\alpha}, \\
&\dot{i}_{S\beta} = -\gamma i_{S\beta} + \eta\zeta\psi_{R\beta} - \zeta n_p\omega\psi_{R\alpha} + (\sigma l_S)^{-1} u_{S\beta}, \\
&\dot{\theta} = \omega,
\end{aligned}
\tag{1}
$$

where: $i_{S\alpha}$, $i_{S\beta}$ are stator currents, $\psi_{R\alpha}$, $\psi_{R\beta}$ – rotor fluxes, ω is rotor speed, θ – rotor position, $u_{S\alpha}$, $u_{S\beta}$ – voltage inputs to the motor, $l_{S(R)}$ – phase stator (rotor) winding inductances, $r_{S(R)}$ – phase stator (rotor) winding resistances, $m_0 = 2/3m$ – mutual inductance, n_p – number of pole-pairs, J – rotor moment of inertia; c – viscous friction coefficient, $\eta = r_R / l_R$, $\sigma = (l_R l_S - m^2)/(l_R l_S)$, $\gamma = (l_R^2 r_S + m^2 l_R \eta)/(\sigma l_R^2 l_S)$, $\mu = n_p m/(l_R J)$, $\zeta = m/(\sigma l_R l_S)$, τ_L – load torque.

The complete derivation of the model can be found in [1, 2, 3].

The induction motor model (1) is put in the following form:

(2) $$\dot{x} = f(x) + g_1 u_1 + g_2 u_2 + f_\tau ,$$

$$x = [x_1\ x_2\ x_3\ x_4\ x_5\ x_6]^{\mathrm{T}} = [\omega\ \psi_{R\alpha}\ \psi_{R\beta}\ i_{S\alpha}\ i_{S\beta}\ \theta]^{\mathrm{T}}\ u_1 = u_{S\alpha},\ u_2 = u_{S\beta},$$

$$f(x) = \begin{bmatrix} \mu(x_2 x_5 - x_3 x_4) - cJ^{-1}x_1 - J^{-1}\tau_L \\ -\eta x_2 - n_p x_1 x_3 + \eta m x_4 \\ -\eta x_3 + n_p x_1 x_2 + \eta m x_5 \\ -\gamma x_4 + \eta\zeta x_2 + \zeta n_p x_1 x_3 \\ -\gamma x_5 + \eta\zeta x_3 - \zeta n_p x_1 x_2 \\ x_1 \end{bmatrix},$$

$$g_1 = \begin{bmatrix} 0 \\ 0 \\ 0 \\ (\sigma l_S)^{-1} \\ 0 \\ 0 \end{bmatrix},\ g_2 = \begin{bmatrix} 0 \\ 0 \\ 0 \\ 0 \\ (\sigma l_S)^{-1} \\ 0 \end{bmatrix},\ f_\tau = \begin{bmatrix} -J^{-1}\tau_L \\ 0 \\ 0 \\ 0 \\ 0 \\ 0 \end{bmatrix}.$$

3. Input-output feedback linearization of the induction motor

Basically, feedback linearization consists of applying a nonlinear transformation on system variables i.e. expressing them in a new “suitable” coordinate system, which will enable the introduction of a feedback, so that an input-output or state linearization in the new coordinates is achieved. Theoretical foundations and a systematic procedure for finding these can be found in [4, 5, 11].

For the induction motor case, by choosing the output functions as the rotor position and flux square respectively

(3) $$y_1 = h_1(x) = x_6 \quad ,\ y_2 = h_2(x) = x_2^2 + x_3^2 \ ,$$

and applying the following transformation:

$$
(4)\qquad
\begin{aligned}
&{}^1\xi_1 = h_1(x) = x_6,\\
&{}^1\xi_2 = L_f h_1(x) = x_1,\\
&{}^1\xi_3 = L_f{}^2 h_1(x) = \mu(x_2x_5 - x_3x_4) - cJ^{-1}x_1,\\
&{}^2\xi_1 = h_2(x) = x_2^2 + x_3^2,\\
&{}^2\xi_2 = L_f h_2(x) = -2\eta(x_2^2 + x_3^2) + 2\eta m(x_2x_4 + x_3x_5),\\
&\chi_1 = \operatorname{arctg}\left(\frac{x_3}{x_2}\right),
\end{aligned}
$$

where $L_f h$ denotes the Lie derivative of the scalar function h with respect to (or along) the vector field f and represents a scalar function defined by $L_f h = \frac{\partial h}{\partial x} f$ (iteratively $L_f{}^n h = L_f L_f{}^{n-1} h$), the system (2) is transformed in the following normal form:

$$
(5)\qquad
\begin{aligned}
&{}^1\dot{\xi}_1 = L_f h_1(x),\\
&{}^1\dot{\xi}_2 = L_f{}^2 h_1(x) + L_{f_\tau} L_f h_1(x),\\
&{}^1\dot{\xi}_3 = L_f{}^3 h_1(x) + L_{g_1} L_f{}^2 h_1(x) u_1 + L_{g_2} L_f{}^2 h_1(x) u_2 + L_{f_\tau} L_f{}^2 h_1(x),\\
&{}^2\dot{\xi}_1 = L_f h_2(x),\\
&{}^2\dot{\xi}_2 = L_f{}^2 h_2(x) + L_{g_1} L_f h_2(x) u_1 + L_{g_2} L_f h_2(x) u_2,\\
&\dot{\chi}_1 = L_f \chi_1(x).
\end{aligned}
$$

The transformation (4) is basically the one given in [8], only position coordinate is added.

The correspondant Lie derivatives are given by the following expressions:

$$
(6)\qquad
\begin{aligned}
&L_f{}^3 h_1(x) = \mu(x_3x_4 - x_2x_5)(cJ^{-1} + \eta + \gamma) +\\
&\qquad + c^2 J^{-2} x_1 - \mu n_p x_1 (x_2x_4 + x_3x_5) - \mu\xi n_p x_1 (x_2^2 + x_3^2),\\
&L_f{}^2 h_2(x) = 2\eta^2 (2 + m\xi)(x_2^2 + x_3^2) + 2\eta^2 m^2 (x_4^2 + x_5^2) +\\
&\qquad + 2\eta m n_p x_1 (x_2x_5 - x_3x_4) - 2\eta m (3\eta + \gamma)(x_2x_4 + x_3x_5),\\
&L_{g_1}{}^2 L_f h_1(x) = -\mu x_3 / (\sigma l_S),\ L_{g_2}{}^2 L_f h_1(x) = \mu x_2 / (\sigma l_S),\ L_{g_1} L_f h_2(x) =\\
&\qquad = 2\eta m x_2 / (\sigma l_S),\ L_{g_2} L_f h_2(x) = 2\eta m x_3 / (\sigma l_S),\\
&L_{f_\tau} L_f h_1(x) = -J^{-1}\tau_L,\ L_{f_\tau} L_f{}^2 h_1(x) = cJ^{-2}\tau_L,\ L_f \chi_1(x) =\\
&\qquad = n_p x_1 - \eta m \frac{x_3x_4 - x_2x_5}{x_2^2 + x_3^2} = n_p\, {}^1\xi_2 + \frac{r_R}{n_p\, {}^2\xi_1}(J\, {}^1\xi_3 + c\, {}^1\xi_2).
\end{aligned}
$$

Choosing the linearizing control law in the form

(7) $$\begin{bmatrix} u_1 \\ u_2 \end{bmatrix} = A(x)^{-1} \begin{bmatrix} v_1 - L_f{}^3 h_1(x) \\ v_2 - L_f{}^2 h_2(x) \end{bmatrix},$$

the linearized system is put in the following form:

(8) $$\begin{aligned} {}^1\dot{\xi}_1 &= {}^1\xi_2, \\ {}^1\dot{\xi}_2 &= {}^1\xi_3 - J^{-1}\tau_L, \\ {}^1\dot{\xi}_3 &= v_1 + cJ^{-2}\tau_L, \\ {}^2\dot{\xi}_1 &= {}^2\xi_2, \\ {}^2\dot{\xi}_2 &= v_2, \end{aligned}$$

(9) $$\dot{\chi}_1 = n_p\, {}^1\xi_2 + \frac{r_R}{n_p\, {}^2\xi_1}(J\, {}^1\xi_3 + c\, {}^1\xi_2).$$

The matrix $A(x)$, called “decoupling”, is given by

(10) $$A(x) = \begin{bmatrix} L_{g_1} L_f{}^2 h_1(x) & L_{g_2} L_f{}^2 h_1(x) \\ L_{g_1} L_f h_2(x) & L_{g_2} L_f h_2(x) \end{bmatrix} = \frac{1}{\sigma l_S} \begin{bmatrix} -\mu x_3 & \mu x_2 \\ 2\eta m x_2 & 2\eta m x_3 \end{bmatrix}.$$

As seen from (10), the decoupling matrix is invertible only when the singularity condition is verified, i.e. when flux magnitude is not zero:

(11) $$\det(A(x)) = -2\eta m \mu (x_2^2 + x_3^2) / (\sigma l_S)^2 \neq 0 .$$

By choosing the control law as (7), the dynamics of the original nonlinear system is decomposed into two parts: a linear input-output map, given by (8) and a nonlinear, unobservable through the output, internal part (9). The stability properties of this internal dynamics, a general limitation of feedback linearization control are not an issue in this case since χ_1 represents an angle by definition. In Fig. 1 the resulting linear decoupled input-output system is shown. It is seen, that the problem of controlling rotor position and flux is rendered to controlling a triple integrator for the position loop and a double integrator for the flux loop.

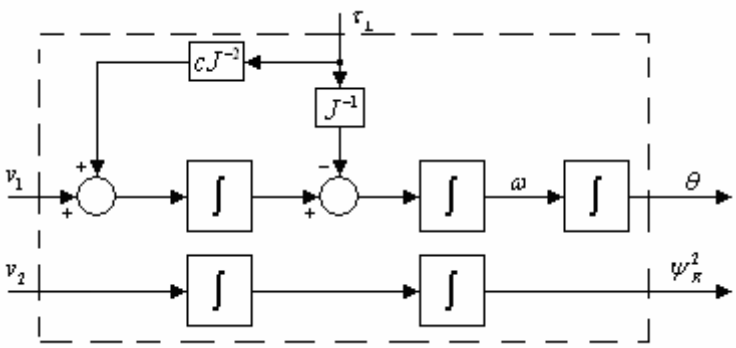

Fig. 1. Input-output linearized sysytem

To study *the effects of variations in mechanical parameter values*, let us assume uncertainties on these parameters, formalized in the following form:

$$\bar{J}_p = k\bar{J}\ ,\ c_p = c + \triangle c\ ,\ \text{with}\ \bar{J} = J^{-1}\ .$$

System (2) can be rewritten as

(12) $$\dot{x} = f(x) + f_1(x) + f_2(x) + g_1 u_1 + g_2 u_2 + f_\tau\ ,$$

where

$$f_1(x) = [(k-1)(\mu(x_2 x_5 - x_3 x_4) - c\bar{J}x_1),\ 0,\ 0,\ 0,\ 0,\ 0]^{\mathrm{T}}\ ,$$

$$f_2(x) = [-k\bar{J}\triangle c x_1,\ 0,\ 0,\ 0,\ 0,\ 0]^{\mathrm{T}}\ ,\ \ f_\tau(x) = [-k\bar{J}\tau_L,\ 0,\ 0,\ 0,\ 0,\ 0]^{\mathrm{T}}\ .$$

Expression (5) takes the following form with variables defined as in (4):

(13)
$$\begin{aligned}
&{}^1\dot{\xi}_1 = L_f h_1(x),\\
&{}^1\dot{\xi}_2 = L_f{}^2 h_1(x) + L_{f_1} L_f h_1(x) + L_{f_2} L_f h_1(x) + L_{f_\tau} L_f h_1(x),\\
&{}^1\dot{\xi}_3 = L_f{}^3 h_1(x) + L_{f_1} L_f{}^2 h_1(x) + L_{f_2} L_f{}^2 h_1(x) +\\
&\qquad + L_{g_1} L_f h_1(x) u_1 + L_{g_2} L_f h_1(x) u_2 + L_{f_\tau} L_f{}^2 h_1(x),\\
&{}^2\dot{\xi}_1 = L_f h_2(x),\\
&{}^2\dot{\xi}_2 = L_f{}^2 h_2(x) + L_{g_1} L_f h_2(x) u_1 + L_{g_2} L_f h_2(x) u_2,\\
&\dot{\chi}_1 = L_f \chi_1(x).
\end{aligned}$$

The respective Lie derivatives are given by expressions

(14)
$$\begin{aligned}
&L_{f_1} L_f h_1(x) = (k-1)(\mu(x_2 x_5 - x_3 x_4) - c\bar{J}x_1) = (k-1) L_f{}^2 h_1(x) = (k-1)\,{}^1\xi_3,\\
&L_{f_2} L_f h_1(x) = -k\bar{J}\triangle c x_1 = -k\bar{J}\triangle c L_f h_1(x) = -k\bar{J}\triangle c\,{}^1\xi_2,\\
&L_{f_1} L_f{}^2 h_1(x) = -c\bar{J}(k-1)(\mu(x_2 x_5 - x_3 x_4) - c\bar{J}x_1) =\\
&\qquad = -c\bar{J}(k-1) L_f{}^2 h_1(x) = -c\bar{J}(k-1)\,{}^1\xi_3,\\
&L_{f_2} L_f{}^2 h_1(x) = -c\bar{J}(-k\bar{J}\triangle c x_1) = k\bar{J}^2 c\triangle c L_f h_1(x) = k\bar{J}^2 c\triangle c\,{}^1\xi_2,\\
&L_{f_\tau} L_f h_1(x) = -k\bar{J}\tau_L,\ L_{f_\tau} L_f{}^2 h_1(x) = k\bar{J}^2 c\tau_L.
\end{aligned}$$

Applying the same linearizing control law (7), the system is put in the following form:

(15)
$$\begin{aligned}
&{}^1\dot{\xi}_1 = {}^1\xi_2,\\
&{}^1\dot{\xi}_2 = k\,{}^1\xi_3 - k\bar{J}\triangle c\,{}^1\xi_2 - k\bar{J}\tau_L,\\
&{}^1\dot{\xi}_3 = -c\bar{J}(k-1)\,{}^1\xi_3 + k\bar{J}^2 c\triangle c\,{}^1\xi_2 + k\bar{J}^2 c\tau_L + v_1,\\
&{}^2\dot{\xi}_1 = {}^2\xi_2,\\
&{}^2\dot{\xi}_2 = v_2,\\
&\dot{\chi}_1 = n_p\,{}^1\xi_2 + \frac{r_R}{n_p\,{}^2\xi_1}(J\,{}^1\xi_3 + c\,{}^1\xi_2).
\end{aligned}$$

By comparing (15) with (8) and (9), it is seen that the internal feedback connections in the position loop appear due to the mechanical parameter

uncertainties and the double integration is lost. Also additional disturbances enter this subsystem. The flux loop is not affected by these variations neither coupling between the subsystems is restored. Fig. 2 visualizes the resulting perturbed linear decoupled input-output system.

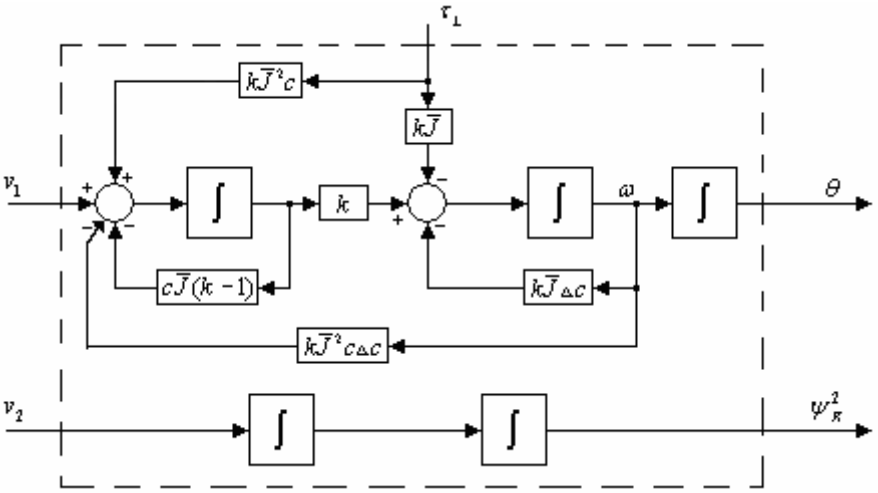

Fig. 2. Perturbed input-output linearized sysytem

4. Outer control loops and flux observer

The block diagram of the proposed control scheme is given in Fig. 3. The position control loop is realized by using a cascade principle and consists of a fast inner speed control loop using a PID controller, also reducing the effects of mechanical parameter variations, and position feedback control loop with a P controller.

The flux control loop is realized by using a PID controller, determining fast output response, thus giving the possibility of setting a desired dynamics of the flux value by an adequate pre-filter.

Since generally the flux vector components are not measurable, a simple flux observer, representing a simulation of the second and third equations in (1) is used to estimate their values. Assuming $\omega = \text{const}, kT_S < t < (k+1)T_S$ and $i_{S*} = \text{const}, kT_S < t < (k+1)T_S$, a discrete-time version of the open-loop simulator is given by:

$$\begin{bmatrix} \psi_{R\alpha}(k+1) \\ \psi_{R\beta}(k+1) \end{bmatrix} = A_d(k) \begin{bmatrix} \psi_{R\alpha}(k) \\ \psi_{R\beta}(k) \end{bmatrix} + B_d(k) \begin{bmatrix} i_{S\alpha}(k) \\ i_{S\beta}(k) \end{bmatrix}, \tag{16}$$

where

$$A_d(k) = e^{-\eta T_S} \begin{bmatrix} \cos(n_p\omega(k)T_S) & -\sin(n_p\omega(k)T_S) \\ \sin(n_p\omega(k)T_S) & \cos(n_p\omega(k)T_S) \end{bmatrix}, \; B_d(k) = \eta m A_d^{-1}(k)(A_d(k) - I).$$

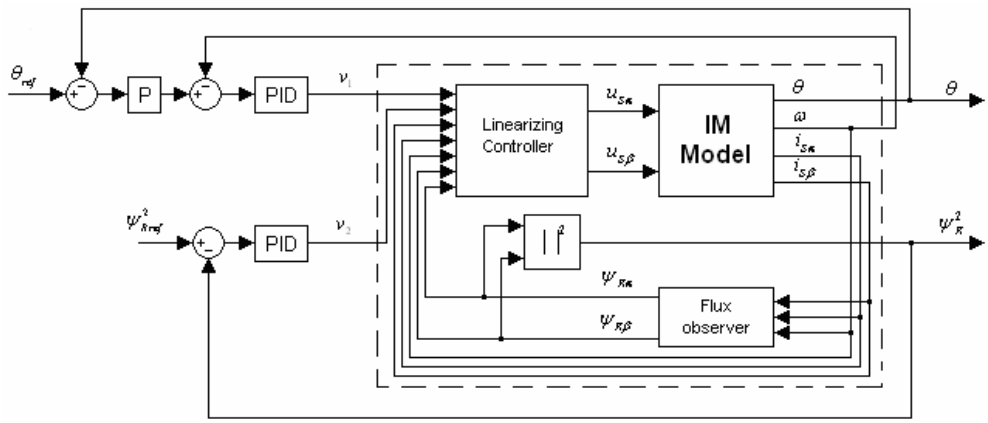

Fig. 3. Overall control system

5. Simulation setup and results

The motor parameters used for simulation purposes, chosen as in [16], are given below:

$$r_S = 20.13\,\Omega,\ \ r_R = 13\,\Omega,\ \ l_S = 1.05\text{ H},\ \ l_R = 1.33\text{ H},\ \ m = 0.957\text{ H},$$
$$J = 0.0005\text{ N.m.s}^2,\ \ c = 0.00014\text{ N.m.s},\ \ n_p = 2\,.$$

The respective gain values for both PID controllers in the position and flux control loops respectively are set to:
$K_P = 2{,}4.10^3$, $K_I = 4{,}8.10^5$, $K_D = 300$. The gain value of the P controller is set to $K = 100$.

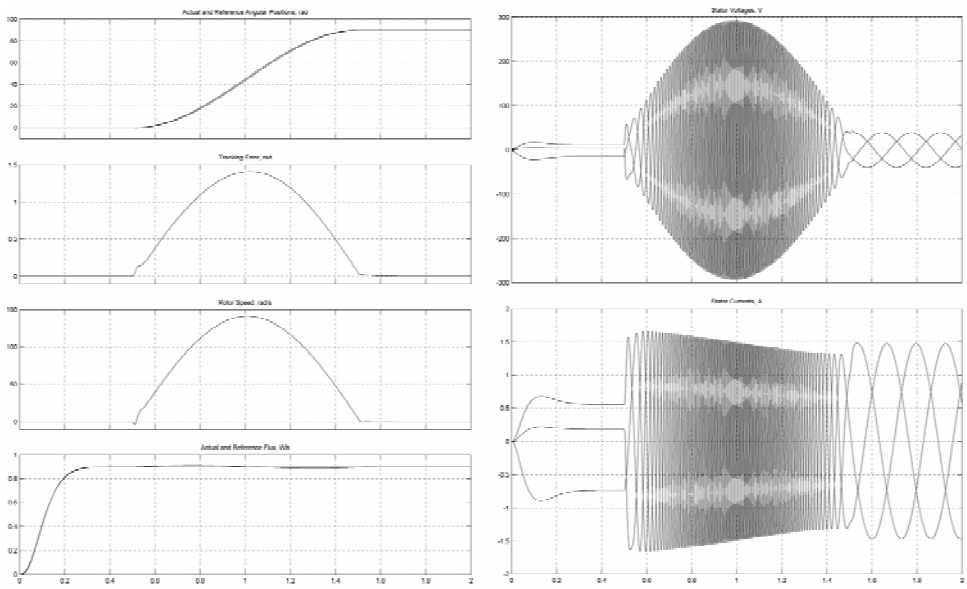

Fig. 4. Transient responses

In order to assess more realistically the feasibility of the proposed control system, both linearizing and outer loops, as well as the flux observer have been simulated with their discrete-time realizations with sampling period $T_S = 0,0005\,\text{s}$. Also, a delay of one sampling period is added to control inputs. The transient responses of the system are shown in Fig. 4. First, the flux is regulated to its nominal value and then the motor is required to attain a position of $90\,\text{rads}$ in one second, along a half-wave sinusoidal speed trajectory. At $t = 0.5\,\text{s}$, a 2 N.m load torque, unknown to the controller is applied. The uncertainties on the mechanical parameter values are set to $\Delta c = 0.5c$ and $k = 0.66$ i. e. $J_p = 1.5J$.

6. Conclusion

In this paper, an induction motor position control system, based on input-output feedback linearization, is proposed.

Simulation results show the system ability to track the desired position trajectory. The main advantage consists in the exact decoupling between mechanical output and flux, obtained as a result of the linearization, a result that can be used for torque optimization. The influence of possible uncertainties on mechanical parameters in the setup of this approach is derived. It is shown that both subsystems remain independent even in their presence, though some internal feedback connections and additional disturbances appear in the position control subsystem. However, due to errors introduced by the discrete-time realization of the flux observer and the linearizing control loop certain coupling is re-instated as the flux value is affected by the rotor speed, which is seen on the transients. Fast outer control loops, with high-gain PID controllers for both subsystems are proposed in order to enable setting the dynamics of their responses as desired by using pre-filters, and to provide robustness against parameter variations. Simulations have shown that the control system can track reference positions, achieving speeds much greater than the nominal speed of the motor, though in those cases the additional delay accounting for control value calculation becomes critical.

Currently, an experimental setup is put in place to confirm the feasibility and practicability of the proposed control system.

References

1. L e o n h a r d, W. Control of Electrical Drives. 2nd Edition. Berlin, Springer, 1996.
2. C h i a s s o n, J. Modeling and High-Performance Control of Electric Machines. Hoboken, New Jersey, John Wiley & Sons, Inc., 2005.
3. D e l a l e a u, E., J. P. L o u i s, R. O r t e g a. Modeling and Control of Induction Motors. – Int. J. Appl. Math. Comput. Sci., Vol. **11**, 2001, No 1, 105-129.
4. K h a l i l, H. Nonlinear Systems. 2nd Edition. Englewood Cliffs, Prentice Hall, 1995.
5. S l o t i n e, J. J. E., W. L i. Applied Nonlinear Control. Englewood Cliffs, NJ, Prentice Hall, 1991.
6. B o d s o n, M., J. C h i a s s o n. Differential-Geometric Methods for Control of Electric Motors. – Int. J. Robust Nonlinear Control, 1998, 923-954.

7. B o d s o n, M., J. C h i a s s o n. R. N o v o t n a k. High-Performance Induction Motor Control Via Input-Output Linearization. – IEEE Control Systems, August 1994, 25-33.
6. M a r i n o, M., S. P e r e s a d a, P. V a l i g i. Adaptive Input-Output Linearizing Control of Induction Motors. – IEEE Transactions on Automatic Control, Vol **38**, Issue 2 , February 1993, 208-221.
7. H u, J., D.M. D a w s o n, Z. Q u. Adaptive Tracking Control of an Induction Motor with Robustness to Parametric Uncertainty. – In: IEE Proc. Electr. Power Appl, Vol. **141**, March 1994, No 2, 85-94.
8. W a n g, W. J., J. Y. C h e n. Passivity-Based Sliding Mode Position Control for Induction Motor Drives. – Energy Conversion, IEEE Transactions on, Vol. **20**, June 2005, Issue 2, 316-321.
11. R e s p o n d e k, W. Geometry of Static and Dynamic Feedback. – Summer School on Mathematical Control Theory, Trieste, Italy, September 2001.
9. W a n g, W. J., J. Y. C h e n. A New Sliding Mode Position Controller with Adaptive Load Torque Estimator for an Induction Motor. – Energy Conversion, IEEE Transactions, Vol. **14**, September 1999, Issue 3, 413-418.
10. W a n g, W. J., J. Y. C h e n. Compositive Adaptive Position Control of Induction Motors Based on Passivity Theory. – Energy Conversion, IEEE Transactions on, Vol. **16**, June 2001, Issue 2, 180-185.
11. C e c a t i, C . Position Control of the Induction Motor Using a Passivity-Based Controller. – Industry Applications, IEEE Transactions, Vol. **36**, September-October 2000, Issue 5, 1277-1284.
15. P a c a s, J. M., R. M. K e n n e l. Servo Drives – State of the Art and Modern Developments. – International Symposium on Industrial Electronics, ISIE 06, July 2006, Montreal, Canada.
12. B e n c h a i b, A., A. R a c h i d, E. A u d r e z e t. Sliding Mode Input–Output Linearization and Field Orientation for Real-Time Control of Induction Motors. – Power Electronics, IEEE Transactions on, Vol. **14**, January 1999, Issue 1, 3-13.